# BSC BIOTECHNOLOGY

**COHORTS 2007-2010**

**SULTAN QABOOS UNIVERSITY**
**COLLEGE OF SCIENCE**
**DEPARTMENT OF BIOLOGY**

## UPDATED JANUARY, 2010

## What is biotechnology?

The 21st century is already being called the 'age of biotechnology'. The biotechnology field is developing and expanding rapidly. Thus, job opportunities for trained biotechnologists are expected to rapidly expand in academic, government and privet sectors. This was as a result of the modern field of biotechnology which has emerged in the last 30-40 years as a major contributor to the advancement of environmental sciences, medicine, agriculture, and industry. Recent developments in biotechnology, where new methods in genetics, biochemistry, microbiology, developmental, cellular and molecular biology promise major improvements in applied biological sciences. The use of biotechnology skill to find new solutions to environmental problems, agricultural productivity and plant disease control, and breakthroughs in human health care, and other areas such as bioprocessing (large-scale separating and purifying techniques), immunobiochemistry, protein engineering, and biocatalysis has created a global impact. As a result, developing countries have become under tremendous pressure to improve environment, agriculture, food, water, health, and to create opportunities for employment and add to the economic progress through environmentally sustainable resources.

The degree of biotechnology in the Department of Biology, SQU, is intended to create entrepreneurs especially for those who love learning science, making new discoveries, solving problems and puzzles, working in different laboratories and doing experiments and even ways to exploit their own environment to use the local resources for commercial applications such as backing, fermentation and pharmaceutical factories. Additionally, for many, biotechnology is being seen as the commercial application of biological knowledge and modern technologies to manufacture products which are used in solving and clean up environmental problems, agriculture, medical treatment and diagnosis, and many other areas.

## Specialization and Major Requirements

No single format leads to a biotechnology degree that prepares a student for a career in this field. A number of institutions, including SQU, offer programs specifically geared to training biotechnologists in the traditional disciplines of biology such as biochemistry, microbiology, or immunology while learning the tools of biotechnology with emphasis in molecular biology. However, many other institutions offer alternative approaches with extra experience in computer sciences and in engineering and its industrial perspective. This will probably be our future objective for biotechnology degree at SQU. Thus, biotechnology must be recognized as one of the most versatile life science majors.

At the lower division level, students develop a thorough and a strong background in general biological sciences where undergraduates receive rigorous coverage of molecular biology and emphasizing in basic concepts of genetics, cell biology, microbiology, immunology physiology, developmental biology, environmental sciences, biochemistry and chemistry. Students choose one of a specific science discipline as a special focus at the upper division level. Each track of study requires significant hands-on experience including an elective program of final year project. Students taking Biotechnology as major, learn how to use state-of-the-art instruments and acquire skills and valuable hands-on experience in many of the sophisticated techniques in laboratory courses. Students are trained to have abilities in creative thinking, effective communication, endurance, tackling problems from many angles, teamwork, and setting and achieving goals. Thus, we believe that offering a bachelor degree in biotechnology in the Department of Biology, SQU, is an important step in capacity building to create skilled biologists and competent biotechnologists in Oman. A graduate with a B.S. in biotechnology would be qualified to enter a higher degree program in biological sciences, biotechnology or related fields at SQU or any international universities.

## Admission Requirements:

The program intake per year is limited to only 60 students. Their selection is subject to the completion of English for Science I course and three science courses including General Biology and General chemistry. Student should score a minimum of C in Biology to be eligible for applying.

## Potential Careers

Although many legislations and laws are in operation to protect the Omani community, we are still facing serious threats from different concerns such as environmental damage, increased cases of cancer, contamination of food, contamination of marine and underground water, land and soil fertility, air pollution, oil spillage, and emergence of new plant diseases that threat our national resources and biodiversity. Such threats need skilled individuals in quality control and modern laboratory techniques related to biotechnology and biological sciences and knowledge in biosafety where application of scientific principles and rigorous implementation is a must. Establishment of transparent principles for safe guarding ethical, legal, and social

issues relating to biotechnology skills in product testing of GM food, labeling, and policy guidelines are important to be perfected especially in a country like Oman where most of the materials for human consumption are imported. Thus, such skilled individuals are important in guarding our borders form undesirable biotechnological materials that may be imported into Oman.

Graduates from such degrees can be trained to work in the following areas of academic, government or private sectors: basic research in biological sciences and biotechnology, laboratory analysis and quality control, environment and biodiversity, clean environment through modern technologies of bioremediation, waste recycling and management of solid and liquid wastes, biofertilizers and biopesticides, food and water industries, plant and animal tissue culture, medicinal plants, marine resources, bioengineering of crops, biofuels and bioenergy, recombinant DNA technology, forensics laboratory to help solve crimes, and regulatory and legislative agencies. Individuals can also enter positions in management, sales, and marketing by including appropriate business courses at an undergraduate or post-graduate level.

**Biotechnology graduates work as:**

Biologist
Bioengineers
Laboratory Analysts
Environmental Biotechnologists
Instrumentation/Calibration Technicians
Microbiologists
Quality Assurance Auditors
Quality Control Analysts
Quality Control Inspectors
Biosafety Specialists
Library Assistants
Animal Technicians
Data Entry Clerks
Greenhouse Assistants
Plant Breeders
Research Associates (R&D)
Statistical Biotechnologists
Sales person of biological materials
Others ...

**Program Objectives:**

1. Capacity Building to fulfil the needs of the Sultanate and the region with biotechnology expertise.
2. Train students to compete in job market with effective communication skills and to work efficiently in biology related laboratories in the Sultanate of Oman and the region.
3. To impart solid foundation in the concepts of biotechnology in furthering ambitious students seeking higher education nationally or internationally.
4. To use the skills achieved from the program outcomes to venture entrepreneurship.
5. To produce graduates with skills to find solutions relevant to biotechnological issues.

**Program Outcome:**

1. Design, develop and apply various experimental skills, as well as analyze and interpret data
2. An ability to function in multidiscipline teams
3. An ability to identify and solve applied science problems
4. An understanding of professional and ethical responsibilities
5. An ability to communicate effectively
6. A knowledge of contemporary issues
7. An ability to use the techniques, skills and modern applied science tools necessary for professional practice
8. To illustrate the correlation between structure and function at all levels of organization (organism, tissue, cells organelles and biomolecules).
9. Visualize the importance of genomics, proteomics of prokaryotic and eukaryotic cells and their application in biotechnology and in human welfare.
10. Demonstrate an understanding of safety issues in the workplace related to the use of biohazards and hazardous chemicals.
11. Emphasize the capabilities of biotechnology in society, as well as its technical and ethical limitations.

# DEGREE PLAN

## Typical Courses

### University Requirements: 18 Credits

| Course Code | Credits | Course Title |
|---|---|---|
| ARAB 1001 | 3 | Arabic Language |
| HIST 1010 | 2 | Oman and Islamic Civil. |
| or | | |
| ISLM1010 | 2 | Islamic Culture |
| SOCI3320 | 1 | Contemp. Oman Society |
| LANC 2050 | 3 | English for Science I |
| LANC 2051 | 3 | English for Science II |

### General Electives= 6 credits

### College Requirements: 26 Credits

| | | |
|---|---|---|
| MATH 1106 | 4 | Precalculus Mathematics |
| BIOL 2101 | 4 | General Biology I |
| CHEM 2101 | 4 | General Chemistry I |
| PHYS 2101 | 4 | General Physics I |
| COMP 1200 | 2 | Personal Computer |

### College electives =2 out of the following

| | | |
|---|---|---|
| COMP 2101 | 4 | Intro. To Comp Sciences |
| ERSC 2101 | 4 | Intro. to Geology I |
| MATH 2107 | 4 | Calculus I |
| STAT 1001 | 4 | Intro. to Statistics I |

### Departmental Requirements: 61 Credits

| | | |
|---|---|---|
| BIOL 2102 | 4 | General Biology II |
| BIOL 3011 | 3 | Plant Physiology |
| BIOL 3023 | 4 | Animal Physiology |
| BIOL 3202 | 3 | Molecular Biology |
| BIOL 3441 | 3 | Introductory Microbiology |
| BIOL 4030 | 3 | Bacteriology |
| BIOL 4034 | 3 | Biochemistry |
| BIOL 4044 | 3 | Fundamentals Biotech |
| BIOL 4100 | 3 | Biological Data Handling |
| BIOL 4432 | 3 | Genetics |
| BIOL 4500 | 3 | Cell Biology |
| BIOL 5031 | 3 | Enzyme Biochemistry |
| BIOL 5040 | 3 | Micro Gen & Gen Eng |
| BIOL 5120 | 3 | Microbial Biotechnology |
| BIOL 5132 | 3 | Tissue Culture |
| BIOL 5144 | 3 | Applied Mycology |
| BIOL 5402 | 3 | Immunology |
| CHEM 2102 | 4 | General Chemistry II |
| CHEM 3322 | 4 | Organic Chemistry |

### Electives = 30 credits

**A. Final year project option:**

Students can select **9 credits** for the final year project option. The remaining **21 credits** of electives can be in one of the following streams.

**B. None final year project option:**

Student are encouraged to take 30 credits in one of the following streams: Two streams can be carefully combined. Those who plan to have a minor must complete 19 credits in one of streams approved by the College of Science.

**Note that** not all streams can lead to a minor. Student must consult their advisors.

B. Biodiversity & Environment
C. Experimental Biotechnology
D. Chemistry
E. Food Sciences
F. Human Nutrition
G. Crop Sciences
H. Petroleum and Chemical engineering

---

## BIOTECHNOLOGY STREAMS

**FOR COHORTS 2007-2010**

## COLLEGE OF SCIENCES

## I. DEPARTMENT OF BIOLOGY

### A. Final year project option (9-credits)

**Students interested to do final year project must take 9 credits of the following courses**

| Course Code | Subject | Credits | Prerequisite |
|---|---|---|---|
| BIOL4000 | Generic Skills for Biologists | 3 | - |
| BIOL5101 | Project I | 3 | BIOL3015 & 5063 (co-requisites) |
| BIOL5103 | Project II | 3 | BIOL5101 |

For the free elective, students can select either minors that are suggested by the College of Science or can select one of the following non- minor (streams) from section B to section H. It is desirable that students select the stream early (3rd year) and complete the respective stream courses so that the graduates may have a better chances to compete in a job market. Students are advised to avoid taking random courses from different streams without completion.

**B. Biodiversity & Environment**

| Course Code | Course Title | Credit | Prerequisite |
|---|---|---|---|
| BIOL3025 | Invertebrates | 3 | BIOL2102 |
| BIOL3002 | Nature Conservation in Oman | 3 | BIOL3005 |
| BIOL3005 | Ecology | 3 | BIOL2102 |
| BIOL3009 | Introduction to Environmenatl Sciences | | BIOL2102 |
| BIOL3205 | Invertebrate | 3 | BIOL2102 |
| BIOL3410 | Angiosperm Biology | 3 | BIOL2102 |
| BIOL4021 | Vertebrate Zoology | 3 | BIOL2102 |
| BIOL4023 | Entomology | 3 | BIOL2102 |
| BIOL4042 | Parasitology | 3 | BIOL3025 |
| BIOL4315 | Phycology | 3 | BIOL2102 |
| BIOL4000 | Generic Skills for Biologists | 3 | |
| BIOL4054 | Marine Biology | 3 | BIOL3005 |
| BIOL5010 | Eco-toxicology | 3 | BIOL3009 |
| BIOL5022 | Insect Pest Control | 3 | BIOL4023 |
| BIOL5045 | Economic Botany | 3 | BIOL2102 |
| BIOL5052 | Fresh Water Biology | 3 | BIOL3005 |
| BIOL5200 | Environmental Biology | 3 | BIOL3005 |

**C. Experimental Biotechnology**

| Course Code | Course Title | Credit | Prerequisite |
|---|---|---|---|
| BIOL4041 | Histology | 3 | BIOL2102 |
| BIOL4501 | Principle of Toxicology | 3 | BIOL2102 |
| BIOL4000 | Generic Skills for Biologists | 3 | |
| BIOL5034 | Plant Metabolites | 3 | BIOL4034 |
| BIOL5400 | Bioinformatics | 3 | BIOL3201, Co-requisite BIOL4500 |
| BIOL5042 | Embryology | 3 | BIOL2102 |
| BIOL5401 | Modern Techniques in Environ Microbiol | 3 | BIOL3201, BIOL3009 |
| BIOL5133 | Plant Biotechnology | 3 | BIOL4046 |
| BIOL5144 | Cytogenetic | 3 | BIOL4432 |
| BIOL5300 | Biofermentation | 2 | BIOL4030 |
| BIOL5500 | Protein Biotechnology | 2 | BIOL4034 |

II. DEPARTMENT OF CHEMISTRY

**D. Chemistry**

| Course Code | Course Title | Credit | Prerequisite |
|---|---|---|---|
| CHEM2101 | General Chemistry I | 4 | |
| CHEM2102 | General Chemistry II | 4 | CHEM2101 |
| CHEM3326 | Application in Spectrum Chemistry | 3 | CHEM3321 or CHEM3327 |
| CHEM3341 | Analytical Chemistry I | 3 | CHEM 2102, MATH1106 |
| CHEM3350 | Environmental Chemistry | 3 | CHEM 2102 |
| CHEM3420 | Petroleum Chemistry | 3 | (CHEM3321 or CHEM2091) |
| CHEM4420 | Petroleum Chemistry | 3 | CHEM3321 |
| CHEM4421 | Organic Chemistry I | 3 | CHEM3321 |
| CHEM4422 | Organic Chemistry II | 3 | CHEM4421 |
| CHEM4441 | Analytical Chemistry II | 3 | CHEM3341 |
| CHEM4424 | Natural Products | 3 | CHEM4421 or CHEM4422 |
| CHEM4442 | Instrumental Chemical Analysis | 3 | CHEM4441 |
| CHEM5532 | Biophysical Chemistry | 3 | CHEM4431 & Co requisite CHEM4432 |
| CHEM5543 | Environmental Monitoring | 3 | CHEM3341 |

**E. Food Science**

| Course Code | Course Title | Credit | Prerequisite |
|---|---|---|---|
| FSHN2071 | Principle of Food Science | 3 | |
| FSHN3076 | Food Processing I | 3 | FSHN2071 |
| FSHN4076 | Food Processing II | 3 | FSHN3076 |
| FSHN3102 | Elements of Food Engineering | 3 | MATH1106, PHYS2101 |
| FSHN3073 | Food Microbiology I | 3 | BIOL3441 |
| FSHN4073 | Food Microbiology II | 3 | FSHN3073 |
| FSHN3075 | Food Sanitation and Quality Control | 3 | FSHN3073 |
| FSHN4075 | Milk and Milk Products | 3 | FSHN3073 |
| FSHN4171 | Food Packaging | 3 | FSHN3102 |

F. Human Nutrition

| Course Code | Course Title | Credit | Prerequisite |
|---|---|---|---|
| FSHN2301 | Introduction to human Diet | 3 | |
| FSHN3301 | Principles of Human Nutrition | 3 | FSHN2301 |
| FSHN3303 | Nutrition Assessment and Planning | 3 | FSHN3301 |
| FSHN3303 | Micronutrients in Human Nutrition | 3 | FSHN3301 |
| FSHN3444 | Macronutrients in Human Nutrition | 3 | FSHN3301 |
| FSHN3401 | Nutrition and Disease I | 3 | FSHN3303 |
| FSHN4303 | Life Cycle Nutrition | 3 | FSHN3301 |
| FSHN4302 | Clinical Nutrition | 3 | FSHN3401 |
| FSHN4401 | Nutrition and Disease II | 3 | FSHN3401 |
| FSHN4502 | Nutritional Toxicology | 3 | FSHN3301 |

**G. Crop Sciences**

| Course Code | Course Title | Credit | Prerequisite |
|---|---|---|---|
| CROP4521 | Bee Keeping | 2 | |
| CROP4529 | Pesticides in Agriculture | 3 | CHEM1901 |
| CROP4545 | Phytonematology | 2 | BIOL2101 |
| CROP4011 | Plant Propagation | 3 | BIOL2101 |
| CROP4513 | Floriculture | 2 | |
| CROP4516 | Date Palm Culture | 3 | BIOL2101 |
| CROP4541 | Plant Pathogens | 3 | CROP3522 |
| CROP4543 | Methods in Plant Pathology | 2 | BIOL2101 |

---

COLLEGE OF ENGINEERING

H. Petroleum and Chemical engineering (Not Finalized, Students should ask for updates)

| Course Code | Course Title | Credit | Prerequisite |
|---|---|---|---|
| CHPE2211 | Applied Physical Chemistry | 3 | CHEM2102 |
| CHPE3101 | Materials Eng | 3 | |
| CHPE3102 | Eng. Thermo | 3 | MATH2107 |
| CHPE3103 | Professional Practice | 1 | LANC2161 |
| CHPE3112 | Princi. of Chem Proc | 3 | CHEM1071 |
| CHPE3211 | Apply Physical Chem | 3 | CHEM2102 |
| CHPE3212 | Chemc. Process. Indus | 3 | CHPE2211 |
| CHPE3302 | Fluid Flow | 3 | CHPE3102 |
| CHPE4512 | Chemical Reaction Engineering | 3 | CHPE3211 |
| PNGE5102 | Health, Safety and Environment | 3 | CHPE3103 |
| PNGE5103 | Engineering Economy | 3 | MATH2107 |

---

## COLLEGE OF AGRICULTURE AND MARINE SCIENCES

### E. Food Science

| Course Code | Course Title | Credit | Prerequisite |
|---|---|---|---|
| FSHN2071 | Principle of Food **Science** | 3 | |
| FSHN3076 | Food Processing I | 3 | FSHN2071 |
| FSHN4076 | Food Processing II | 3 | FSHN3076 |
| FSHN3102 | Elements of Food Engineering | 3 | MATH1106, PHYS2101 |
| FSHN3073 | Food Microbiology I | 3 | BIOL3441 |
| FSHN4073 | Food Microbiology II | 3 | FSHN3073 |
| FSHN3075 | Food Sanitation and Quality Control | 3 | FSHN3073 |
| FSHN4075 | Milk and Milk Products | 3 | FSHN3073 |
| FSHN4171 | Food Packaging | 3 | FSHN3102 |

### F. Human Nutrition

| Course Code | Course Title | Credit | Prerequisite |
|---|---|---|---|
| FSHN2301 | Introduction to human Diet | 3 | |
| FSHN3301 | Principles of Human Nutrition | 3 | FSHN2301 |
| FSHN3303 | Nutrition Assessment and Planning | 3 | FSHN3301 |
| FSHN3303 | Micronutrients in Human Nutrition | 3 | FSHN3301 |
| FSHN3444 | Macronutrients in Human Nutrition | 3 | FSHN3301 |
| FSHN3401 | Nutrition and Disease I | 3 | FSHN3303 |
| FSHN4303 | Life Cycle Nutrition | 3 | FSHN3301 |
| FSHN4302 | Clinical Nutrition | 3 | FSHN3401 |
| FSHN4401 | Nutrition and Disease II | 3 | FSHN3401 |
| FSHN4502 | Nutritional Toxicology | 3 | FSHN3301 |

### G. Crop Sciences

| Course Code | Course Title | Credit | Prerequisite |
|---|---|---|---|
| CROP4521 | Bee Keeping | 2 | |
| CROP4529 | Pesticides in Agriculture | 3 | CHEM1901 |
| CROP4545 | Phytonematology | 2 | BIOL2101 |
| CROP4011 | Plant Propagation | 3 | BIOL2101 |
| CROP4513 | Floriculture | 2 | |
| CROP4516 | Date Palm Culture | 3 | BIOL2101 |
| CROP4541 | Plant Pathogens | 3 | CROP3522 |
| CROP4543 | Methods in Plant Pathology | 2 | BIOL2101 |

## COLLEGE OF ENGINEERING

### H. Petroleum and Chemical engineering (Not Finalized, Students should ask for updates)

| Course Code | Course Title | Credit | Prerequisite |
|---|---|---|---|
| CHPE2211 | Applied Physical Chemistry | **3** | CHEM2102 |
| CHPE3101 | Materials Eng | **3** | |
| CHPE3102 | Eng. Thermo | **3** | MATH2107 |
| CHPE3103 | Professional Practice | 1 | LANC2161 |
| CHPE3112 | Princi. of Chem Proc | **3** | CHEM1071 |
| CHPE3211 | Apply Physical Chem | **3** | CHEM2102 |
| CHPE3212 | Chemc. Process. Indus | **3** | CHPE2211 |
| CHPE3302 | Fluid Flow | **3** | CHPE3102 |
| CHPE4512 | Chemical Reaction Engineering | **3** | CHPE3211 |
| PNGE5102 | Health, Safety and Environment | **3** | CHPE3103 |
| PNGE5103 | Engineering Economy | **3** | MATH2107 |

**Department of Biology**
**Biotechnology Work Plan 2007-2010**

| Semester 1 | | Semester 2 (15 credits) | |
|---|---|---|---|
| Intensive English | | LANC 2050 * | 3 |
| | | MATH 1106 * | 4 |
| | | BIOL 2101* § | 4 |
| | | COMP 1200 * | 2 |
| | | HIST 1010 / ISLM1010 * | 2 |
| **Semester 3 (15 credits)** | | **Semester 4 (15 credits)** | |
| LANC2051 * | 3 | BIOL2102 * § | 4 |
| CHEM2101* § | 4 | CHEM2102 * | 4 |
| PHYS2101 * | 4 | College Requirement * | 4 |
| College Requirement * | 4 | ARAB1001 * | 3 |
| **Semester 5 (15 credits)** | | **Semester 6 (15 credits)** | |
| BIOL3011* | 3 | BIOL3023* | 4 |
| BIOL3202*§ | 3 | BIOL4432*§ | 3 |
| BIOL3441*§ | 3 | (Stream or Minor) Elective | 3 |
| CHEM3322*§ | 4 | (Stream or Minor) Elective | 3 |
| University Elective* | 2 | University Elective* | 2 |
| **Semester 7 (15 credits)** | | **Semester 8 (15 credits)** | |
| BIOL4034*§ | 3 | BIOL4030 | 3 |
| BIOL4044 § | 3 | BIOL4500*§ | 3 |
| BIOL4100 | 3 | BIOL5031 | 3 |
| (Stream or Minor) Elective | 3 | (Stream or Minor) Elective | 3 |
| SOCI3221 | 1 | (Stream or Minor) Elective | 3 |
| University Elective | 2 | | |
| **Semester 9 (15 credits)** | | **Semester 10 (15 credits)** | |
| BIOL5144 | 3 | BIOL5040 | 3 |
| BIOL5120 | 3 | BIOL5132 | 3 |
| (Stream or Minor) Elective | 3 | BIOL5402 | 3 |
| (Stream or Minor) Elective | 3 | (Stream or Minor) Elective | 3 |
| (Stream or Minor) Elective | 3 | (Stream or Minor Elective) | 3 |

*** Courses offered every semester**
**§ Prerequisites for advanced courses (Students must pay careful attention for these courses to avoid delaying in their degree plan).**

**To avoid timetable conflicts and delays to graduate, students are advised to follow the work plan and the fixed TIMETABLES carefully, The flow plan (shown here) of prerequisites (1-4) will help student to avoid delays. Students *MUST* take *TWO* prerequisites for BIOL 5120 and BIOL 5132. Students failed to do so will not be allowed to register in those two courses.**

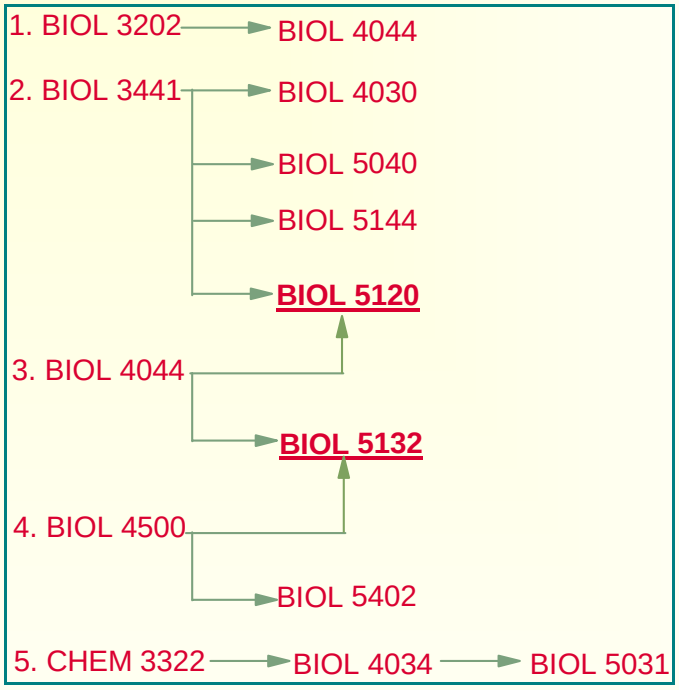

## Scheduled Courses for Fall, Spring and Summer Offered by the Department of Biology

| Course Code | Course Name | Pre-requisite(s) | Semesters offered | | |
|---|---|---|---|---|---|
| | | | Fall | Spring | Summer |
| BIOL1003 | Genetics in our Daily Life | None | * | * | |
| BIOL1004 | Environmental Protection | None | * | * | |
| BIOL 2101 | General Biology I | None | * | * | * |
| BIOL 2102 | General Biology II | BIOL 2101 | * | * | * |
| BIOL 2105 | Human Phys | BIOL 2101 | * | * | |
| BIOL 3002 | Nature Conserv in Oman | Instructor | | * | |
| BIOL 3005 | Ecology | BIOL 2102 | * | | |
| BIOL 3009 | Introduction to Env Sci | BIOL 2102 | * | | |
| BIOL 3011 | Plant Physiology | BIOL 2102 | * | * | |
| BIOL 3023 | Animal Physiology | BIOL 2102/ BIOL 2105 | * | * | |
| BIOL 3025 | Invertebrates | BIOL 2102 | * | | |
| BIOL 3202 | Molecular Biology | BIOL 2101 | * | * | |
| BIOL 3410 | Angiosperm Biology | BIOL 2102 | | * | |
| BIOL 3441 | Microbiology | BIOL 2101 | * | * | |
| BIOL 4000 | Generic Skills for Biologists | Co-requisite BIOL 5101 | | | |
| BIOL 4021 | Vertebrate Zoology | BIOL 2102 | * | | |
| BIOL 4023 | Entomology | BIOL 2102 | | * | |
| BIOL 4025 | Env Phys | | | | |
| BIOL 4030 | Bacteriology | BIOL 3441 | | * | |
| BIOL 4034 | Biochemistry | BIOL 2101 + CHEM 3321/CHEM 3327 | * | * | |
| BIOL 4040 | Animal Behavior | BIOL 3022 | | * | |
| BIOL 4041 | Histology | BIOL 2102 | * | | |
| BIOL 4042 | Parasitology | BIOL2101 | * | | |
| BIOL 4044 | Fundamentals Biotech | BIOL 3202 | * | | |
| BIOL 4054 | Marine Biology | BIOL 3005 | * | | |
| BIOL 4315 | Phycology | BIOL 2102 | * | | |
| BIOL 4402 | Current Topics in Biology | -- | * | | |
| BIOL 4432 | Genetics | BIOL 2101 | * | * | |
| BIOL 4500 | Cell Biology | BIOL 2101 | * | * | |
| BIOL 4501 | Principles of Toxicology | BIOL2102 | | * | |
| BIOL 5002 | Waste Management | BIOL 3009 | | * | |
| BIOL 5010 | Ecotoxicology | BIOL 3009 | | | |
| BIOL 5021 | Desert Biology | BIOL 3005 | | * | |
| BIOL5022 | Insect Pest Control | BIOL 4023 | | | |
| BIOL 5031 | Enzyme Biochemistry | BIOL 4034 | | | |
| BIOL 5034 | Plant Metabolites | BIOL 4034 | | | |
| BIOL5040 | Microbial Gen & Genetic Engineering | BIOL 3441 | | | |
| BIOL 5042 | Embryology | BIOL 2102 | | * | |
| BIOL 5044 | Mycology | BIOL 3441 | | * | |
| BIOL 5045 | Economic Botany | BIOL 2102 | | | |
| BIOL 5052 | Freshwater Biology | BIOL 3005 | * | | |
| BIOL 5054 | Conservation | BIOL 3005 | * | | |
| BIOL 5063 | Biological Data Handling | Instructor | * | * | |
| BIOL 5101 | Research Projects I | Instructor | * | * | |
| BIOL 5103 | Research Projects II | BIOL 5101 | * | * | |
| BIOL 5120 | Microbial Biotechnology | BIOL 3441 + BIOL 4044 | * | | |
| BIOL 5132 | Tissue Culture | BIOL 4044 + 4500 | * | | |
| BIOL 5133 | Plant Biotechnology | BIOL 4046 | | | |
| BIOL 5144 | Applied Mycology | BIOL 3441 | | * | |
| BIOL 5142 | Cytogenetics | BIOL 4432 | | | |
| BIOL 5200 | Environmental Biology | BIOL 3005 | | | |
| BIOL 5300 | Biofermentation | BIOL 4030 | | | |
| BIOL 5400 | Bio-Informatics | BIOL3201, Co-requisite BIOL4500 | | * | |
| BIOL 5401 | Modern Techs In Env Microbiol | BIOL3201, BIOL3009 | | | |
| BIOL 5402 | Immunology | BIOL 4500 | | * | |
| BIOL 5500 | Protein Biotechnology | BIOL 4034 | | | |

## Biology Fall Semesters and Spring Timetables

***THE DEPARTMENT IS ATTEMPTING TO FIX THE FALL AND SPRING TIMETABLES. MINOR CHANGES MAY BE DONE TO THE FIXED TIMETABLE IN THE FUTURE. STUDENTS ARE SUPPOSE TO ASK FOR THE UPDATED VERSIONS WITH THEIR ADVISORS.***

---

## Biology Spring Semesters Timetable

### Please write your timetable below

| Day\Time | Saturday | Sunday | Monday | Tuesday | Wednesday |
|---|---|---|---|---|---|
| 8:00 to 8:50 | | | | | |
| 9:00 to 9:50 | | | | | |
| 10:00 to 10:50 | | | | | |
| 11:00 to 11:50 | | | | | |
| 12:00 to 12:50 | | | | | |
| 13:00 to 13:50 | | | | | |
| 2:15 to 3:05 | | | | | |
| 3:15 to 4:05 | | | | | |
| 4:15 to 5:05 | | | | | |

# Biology Spring Semesters Timetable

## Please write your timetable below

| Day\Time | Saturday | Sunday | Monday | Tuesday | Wednesday |
|---|---|---|---|---|---|
| 8:00 to 8:50 | | | | | |
| 9:00 to 9:50 | | | | | |
| 10:00 to 10:50 | | | | | |
| 11:00 to 11:50 | | | | | |
| 12:00 to 12:50 | | | | | |
| 13:00 to 13:50 | | | | | |
| 2:15 to 3:05 | | | | | |
| 3:15 to 4:05 | | | | | |
| 4:15 to 5:05 | | | | | |
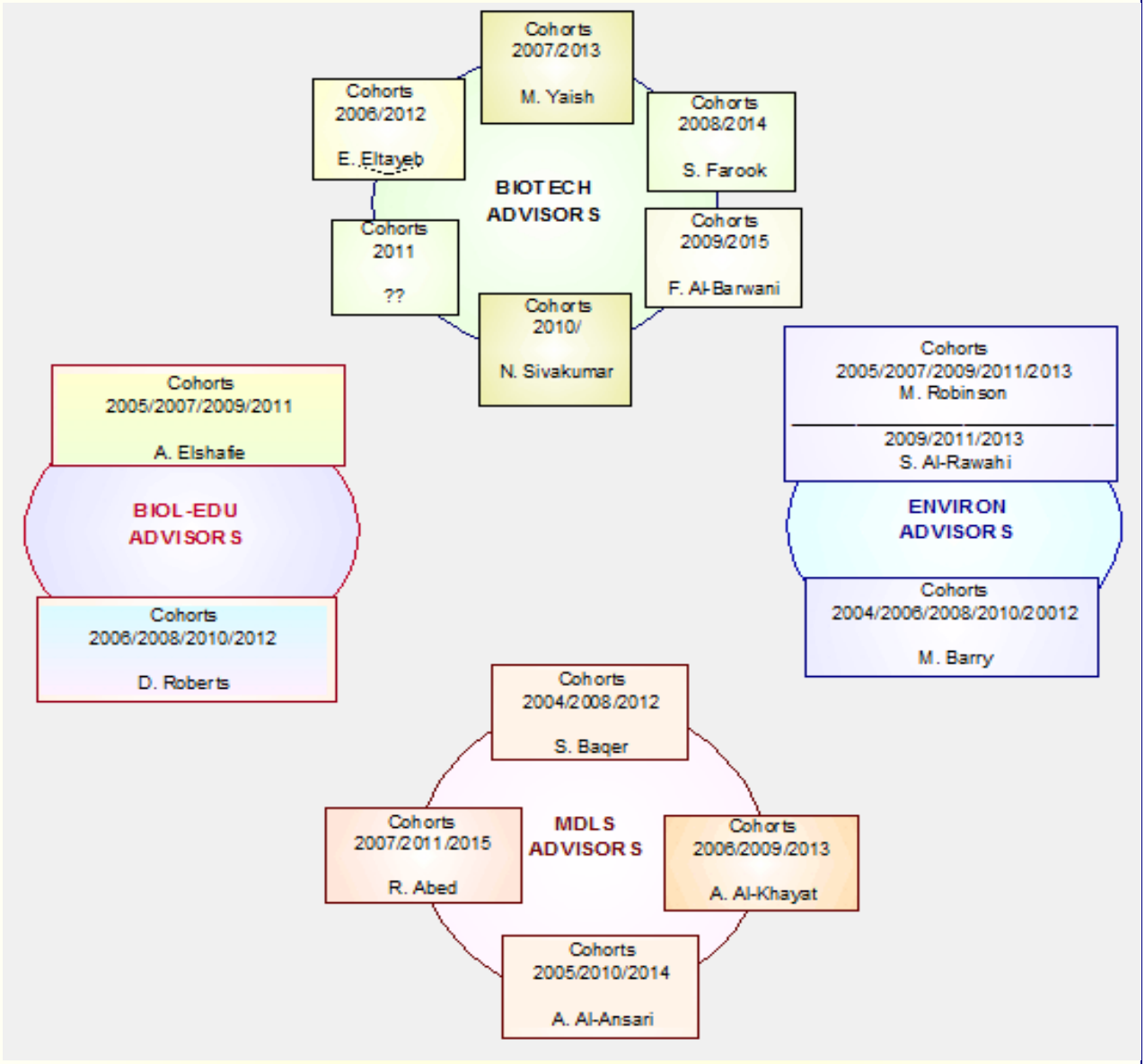
## Department of Biology Undergraduate Student Advisors